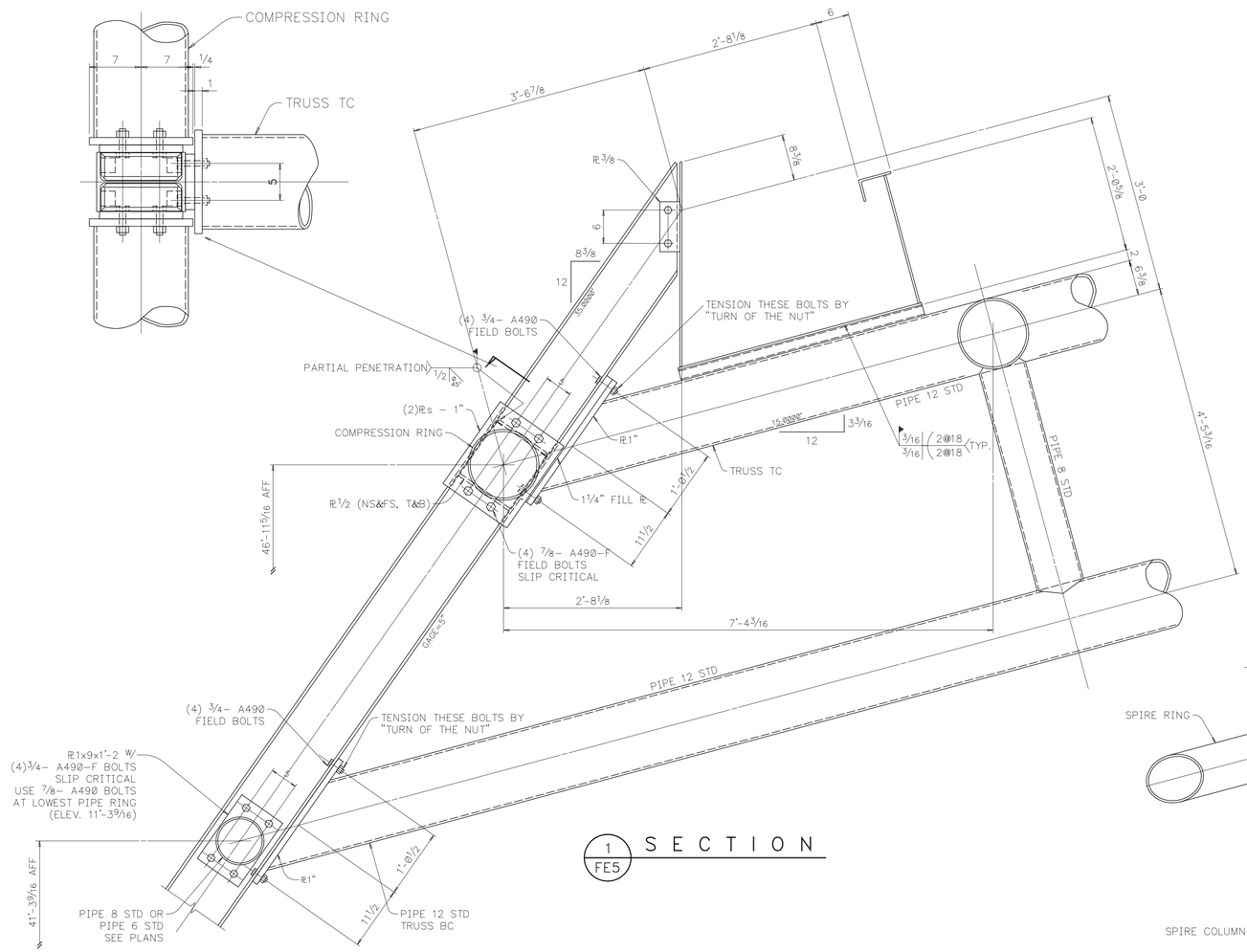

1 FE5 SECTION

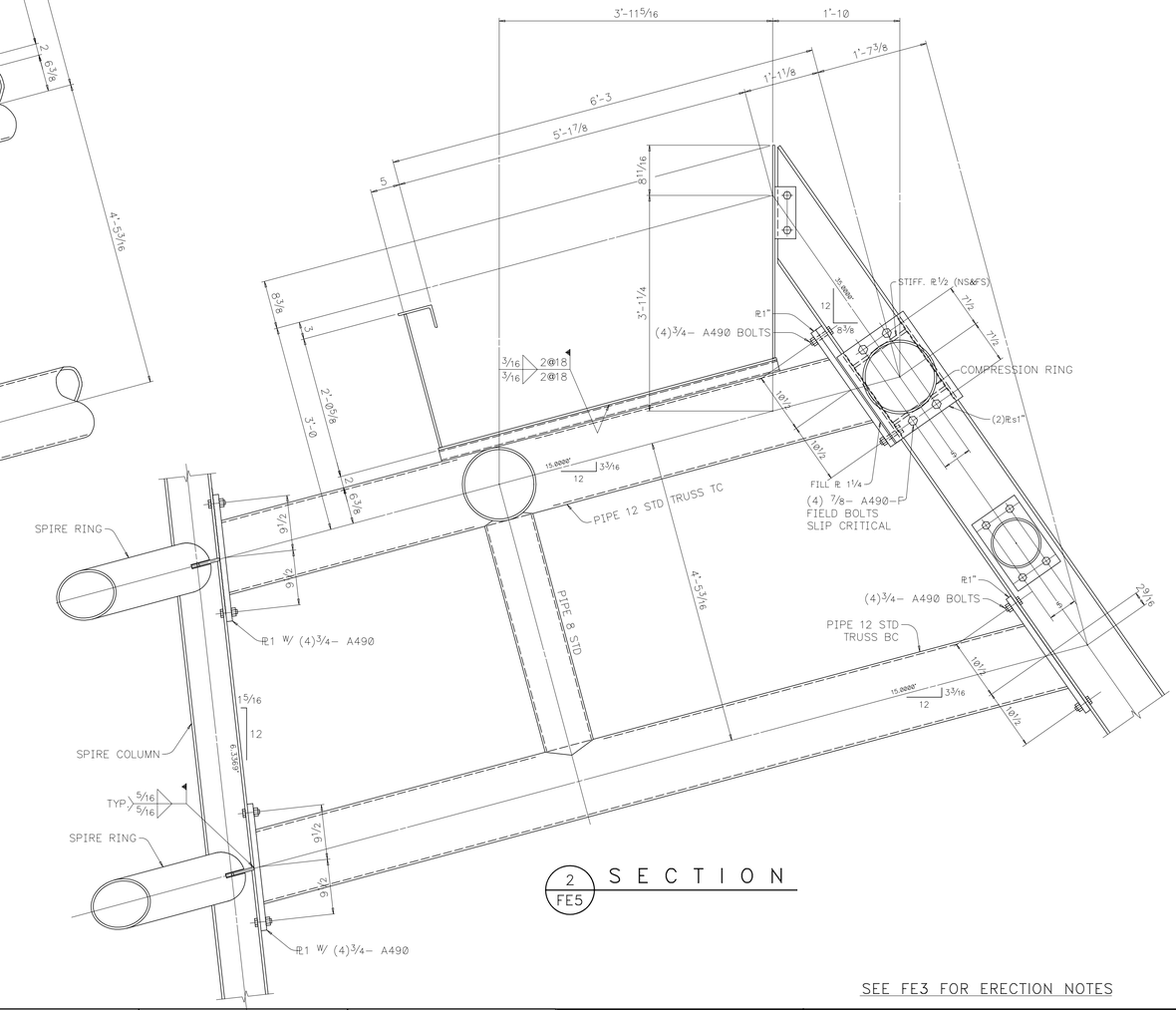

2 FE5 SECTION

SEE FE3 FOR ERECTION NOTES

FOR APPROVAL				APPROVED FOR FAB			FIELD USE		
REV.	DATE	DATE APPR.	INIT.	REV.	DATE	INITIAL	REV.	DATE	INITIAL

REVISIONS

GRACE & WYLIE FABRICATORS, INC.
Plant: Springfield, Tennessee
Office: Brentwood, Tennessee

Structure: THE NATIONAL CORVETTE MUSEUM
Location: BOWLING GREEN, KY
Customer: ALLIANCE/TURNER
Architect: NEUMANN SMITH & ASSOCIATES
Detail of: SECTIONS

SEQUENCE					
4	Holes 13/16- Unless Noted Paint 1 S/C RED OXIDE	Detailed By BV Date 1/94 Checked By DG Date	Sheet No. FE5 of	Contract No. 1238