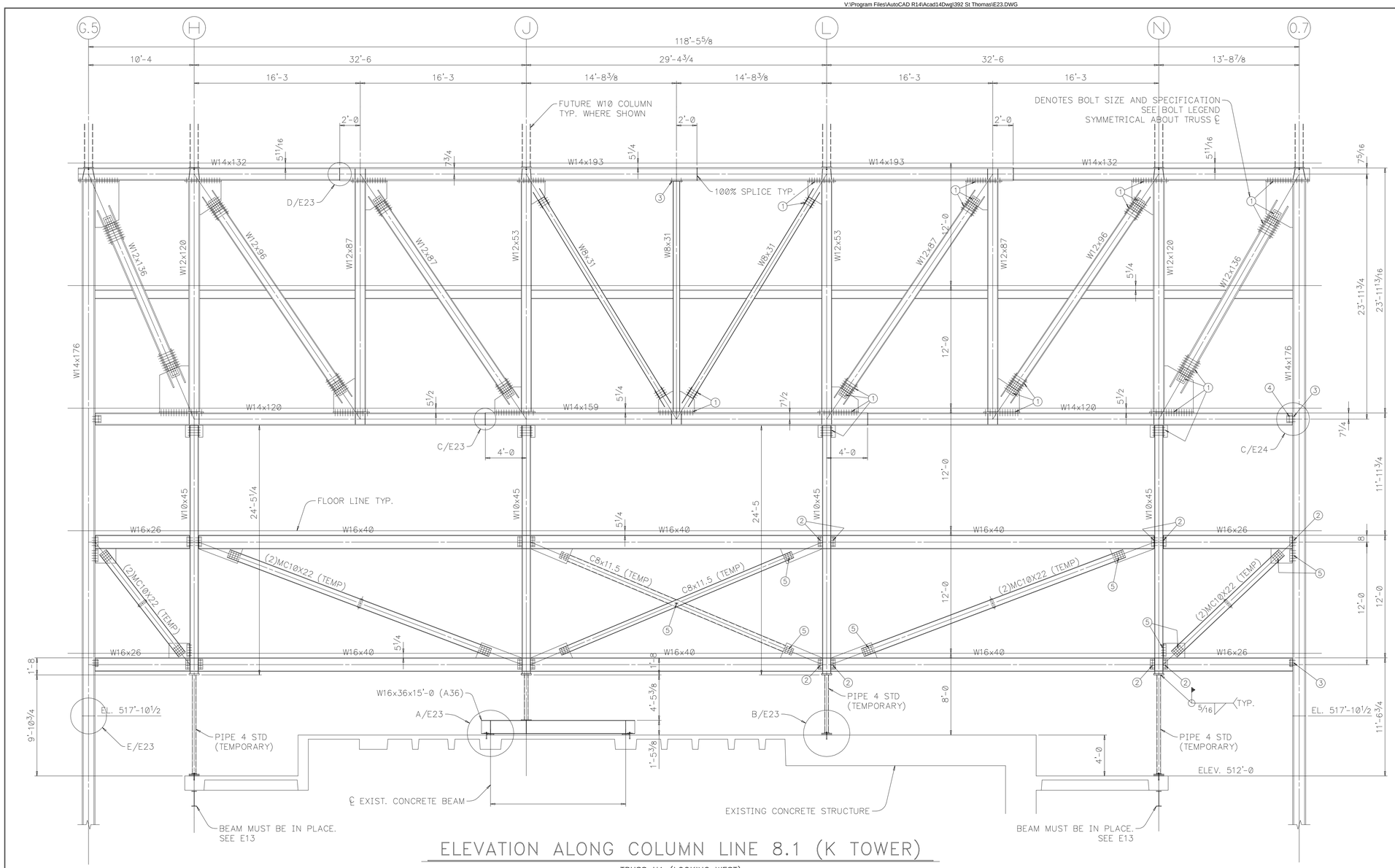

ELEVATION ALONG COLUMN LINE 8.1 (K TOWER)

TRUSS H1 (LOOKING WEST)
SEE E1 FOR TYPICAL CONNECTION DETAILS AND ADDITIONAL ERECTION NOTES

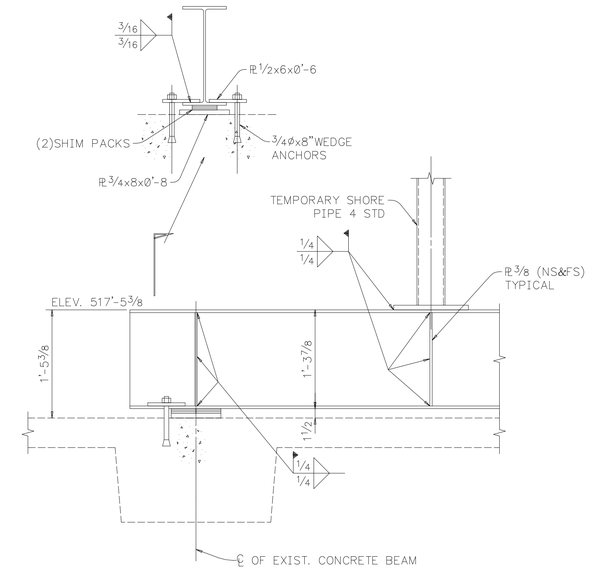

A / E23 Detail

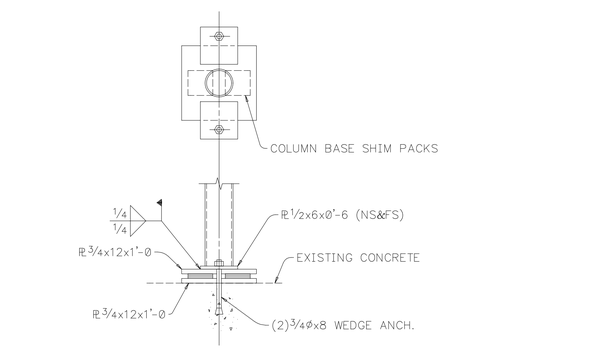

B / E23 Detail

TRUSS NOTES:
1. ALL TRUSS MEMBERS ARE A572–50. ALL TRUSS GUSSET PLs ARE A572–50.
2. CONNECTIONS OF TRUSS DIAGONAL MEMBERS ARE TO BE MADE WITH 1"ø A490–X BOLTS IN STD. HOLES.
3. CONNECTIONS OF TRUSS VERTICALS TO CHORD MEMBERS ARE TO BE MADE WITH 1"ø A490–X BOLTS IN STD. HOLES. INSTALL A WASHER UNDER THE TURNED ELEMENT.
4. CONNECTIONS OF TEMPORARY TRUSS DIAGONAL MEMBERS ARE TO BE MADE WITH 1"ø A490–F BOLTS IN OVERSIZE HOLES. INSTALL HARDENED WASHER UNDER THE NUT AND HEAD.
5. TRUSS MEMBERS NOTED "(TEMP)" ARE TEMPORARY AND ARE TO BE REMOVED AS DIRECTED BY THE CONTRACT DOCUMENTS.
6. TAKE CARE NOT TO MIX UP A325 AND A490 BOLTS. SEE TRUSS ELEVATION.
7. INSTALL 16 GA. FINGER SHIMS AS REQUIRED IN TRUSS DIAGONAL JOINTS AS REQUIRED TO ACHIEVE PROPER CONTACT BETWEEN BOLTED SURFACES.

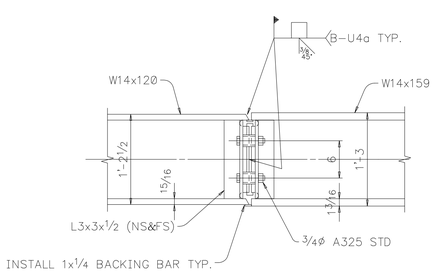

C / E23 Detail

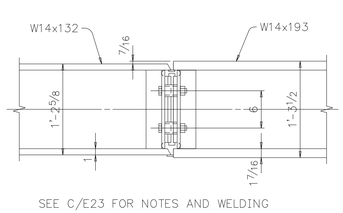

D / E23 Detail

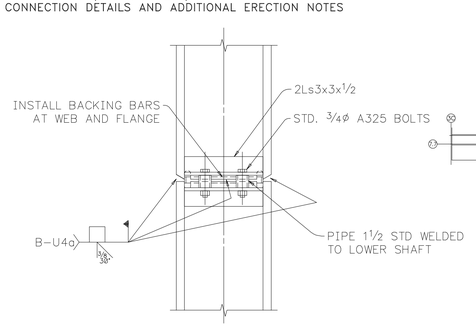

E / E23 Detail

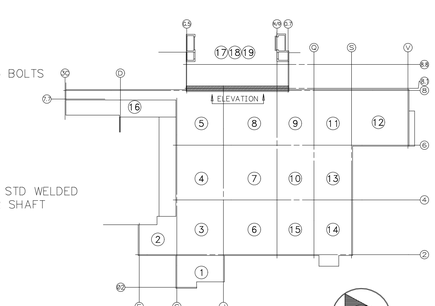

BOLT LEGEND
1 1"ø A490–X STD BOLTS
2 1"ø A325 LIB BOLTS
3 3/4ø A325 LIB BOLTS
4 3/4ø A325 STD BOLTS
5 1"ø A490–F STD BOLTS

FABARC will detail and/or design connections not furnished on design drawings; however such connections developed by FABARC are only to accomodate fabricating shop equipment and procedures. Responsibility for design of the structure, including design of connections, shall remain with the Architect and Engineer of record. FABARC and its detailers, not being designers of steel, shall have no final design responsibilities whatsoever.

ALL ERRORS IN FABRICATION MUST BE REPORTED TO THE FABRICATOR WITHIN 24 HOURS FOR DECISION AS TO THE BEST METHOD OF CORRECTION. BACK CHARGES WILL NOT BE ACCEPTED UNLESS OUR CONSENT IS GIVEN IN ADVANCE IN WRITING.

Fabarc Steel Supply, Inc.

ANNISTON, ALABAMA

PRINT RECORD		
QUANT.	DATE	FOR

STRUCTURE	K–TOWER – D&T BUILDING
DETAIL	FRAMING ELEVATION TRUSS H1
CONTRACTOR	TURNER CONSTRUCTION CO.
OWNER	ST. THOMAS HOSPITAL
ENG. OR ARCH.	HENNINGSON, DURHAM & RICHARDSON, INC.

Conns 3/4ø A325 LIB / E70xx Unless Noted
Holes 13/16"ø Unless Noted
Paint NONE UN
Made BV Date 4/93
Chkd DG Date

REVISIONS				SHOP ORDER	SHEET NO.
1	2	3	4	3–121	E23