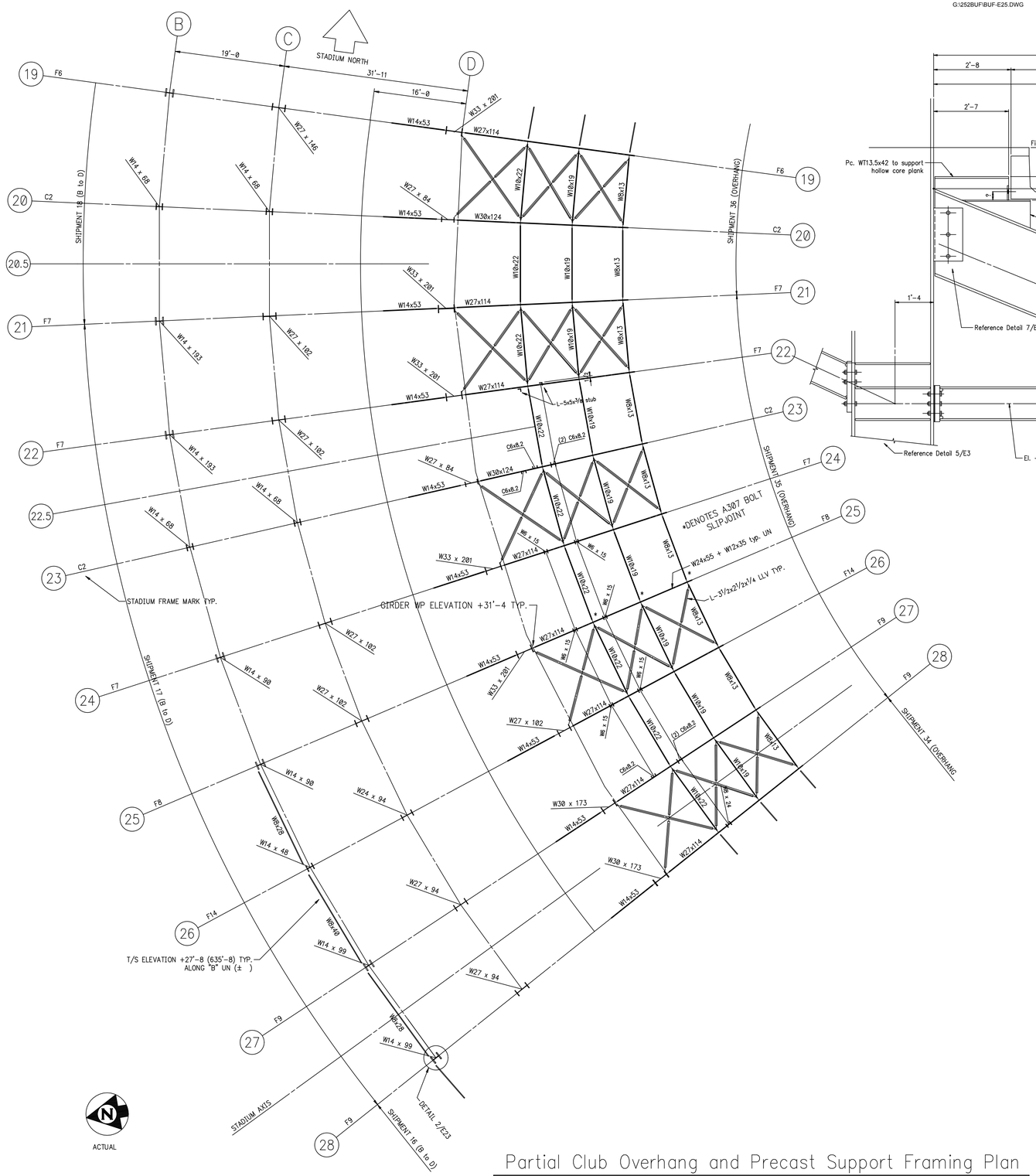

Partial Club Overhang and Precast Support Framing Plan

T/S ELEVATION +33'-0 UN (±) (see note 8)

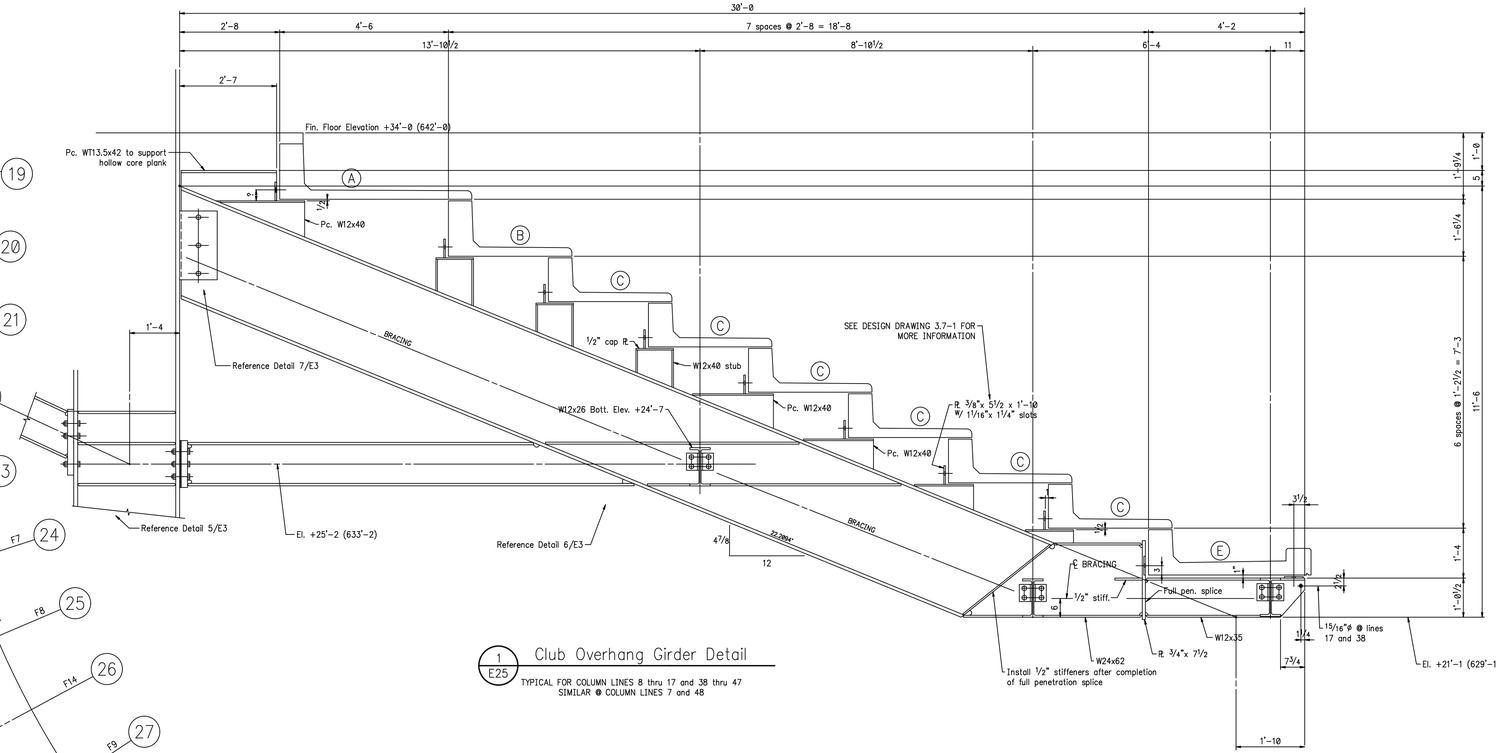

1 / E25 Club Overhang Girder Detail

TYPICAL FOR COLUMN LINES 8 thru 17 and 38 thru 47
SIMILAR @ COLUMN LINES 7 and 48

NOTES:
1. ALL ELEVATIONS ARE BASED ON FINISHED MAIN CONCOURSE/ENTRY LEVEL ELEVATION = 0'-0 (ACTUAL ELEVATION = 608'-0).
2. SEE AB6 FOR ANCHOR BOLT, COLUMN BASE, AND BEAM BEARING DETAILS.
3. SEE E1 FOR KEY PLAN OF STADIUM AND OVERALL GEOMETRY.
4. FIELD WELDED MOMENT CONNECTIONS ARE NOTED ON THE PLAN THUS: ←
   SEE APPROPRIATE SECTIONS AND DETAILS.
5. STUDS ARE TO BE FIELD WELDED TO TOP OF BEAMS WHERE QUANTITY FOR SAME IS INDICATED THUS: [quantity]
   STUDS ARE TO BE SPACED EQUALLY ALONG LENGTH OF BEAM.
6. SEE E2 FOR TYPICAL CONNECTION NOTES.
7. FRAME SHEETS F1 THRU F4 FOR ELEVATIONS OF STADIUM FRAMES.
8. T/S ELEVATIONS SHOWN IN PARENTHESES (±) ARE RELATIVE TO THE TYPICAL T/S ELEVATION FOR THIS SHEET.

Buffalo Sports Complex
Buffalo, New York
Hellmuth, Obata & Kassabaum, Inc.
Cowper Const. Management, Inc.
B. Vaughan
DG

E70xx

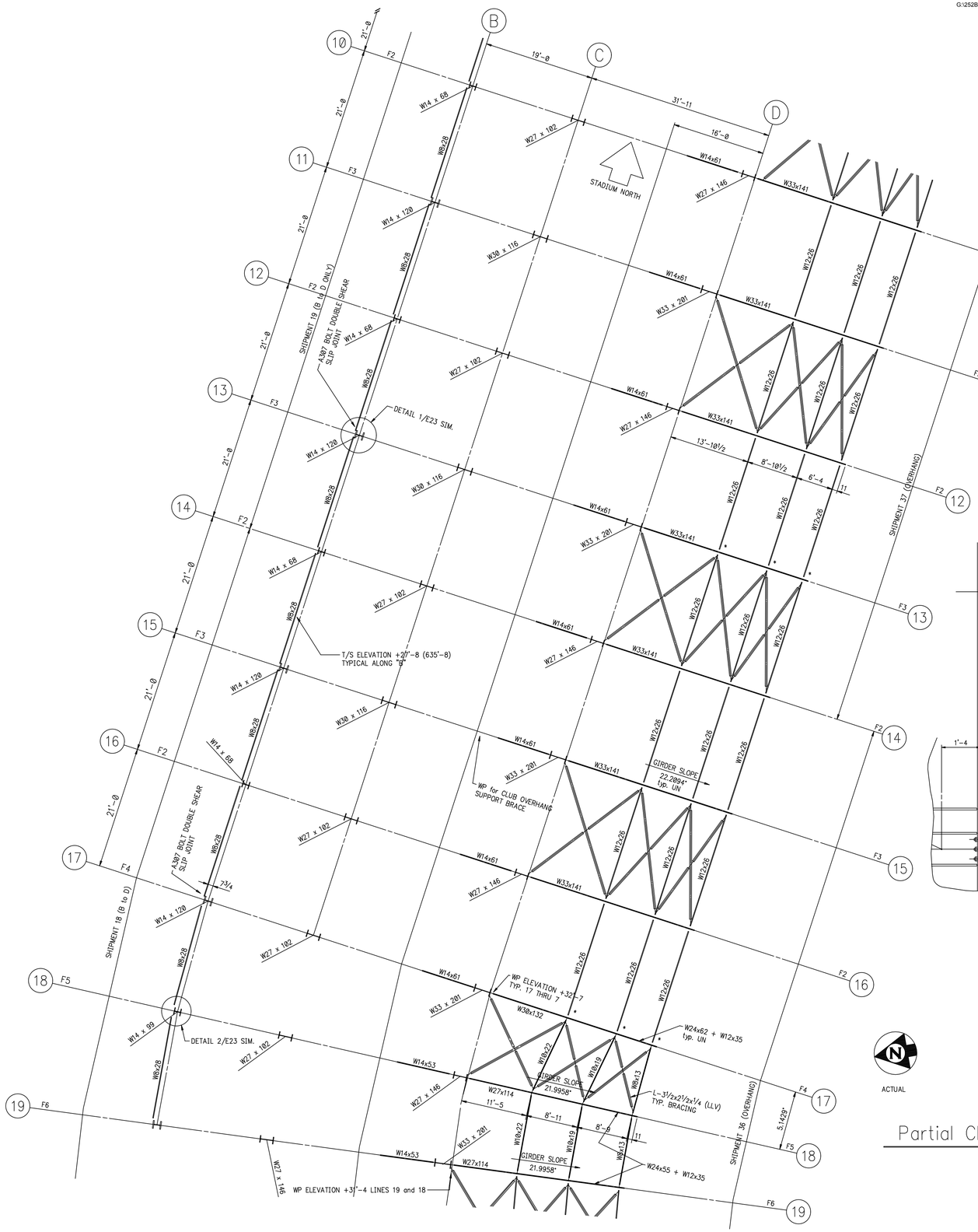

NOTES:
1. ALL ELEVATIONS ARE BASED ON FINISHED MAIN CONCOURSE/ENTRY LEVEL ELEVATION = 0'-0 (ACTUAL ELEVATION = 608'-0).
2. SEE AB6 FOR ANCHOR BOLT, COLUMN BASE, AND BEAM BEARING DETAILS.
3. SEE E1 FOR KEY PLAN OF STADIUM AND OVERALL GEOMETRY.
4. FIELD WELDED MOMENT CONNECTIONS ARE NOTED ON THE PLAN THUS: ←
   SEE APPROPRIATE SECTIONS AND DETAILS.
5. STUDS ARE TO BE FIELD WELDED TO TOP OF BEAMS WHERE QUANTITY FOR SAME IS INDICATED THUS: [quantity]
   STUDS ARE TO BE SPACED EQUALLY ALONG LENGTH OF BEAM.
6. SEE E2 FOR TYPICAL CONNECTION NOTES.
7. FRAME SHEETS F1 THRU F4 FOR ELEVATIONS OF STADIUM FRAMES.
8. T/S ELEVATIONS SHOWN IN PARENTHESES (±) ARE RELATIVE TO THE TYPICAL T/S ELEVATION FOR THIS SHEET.

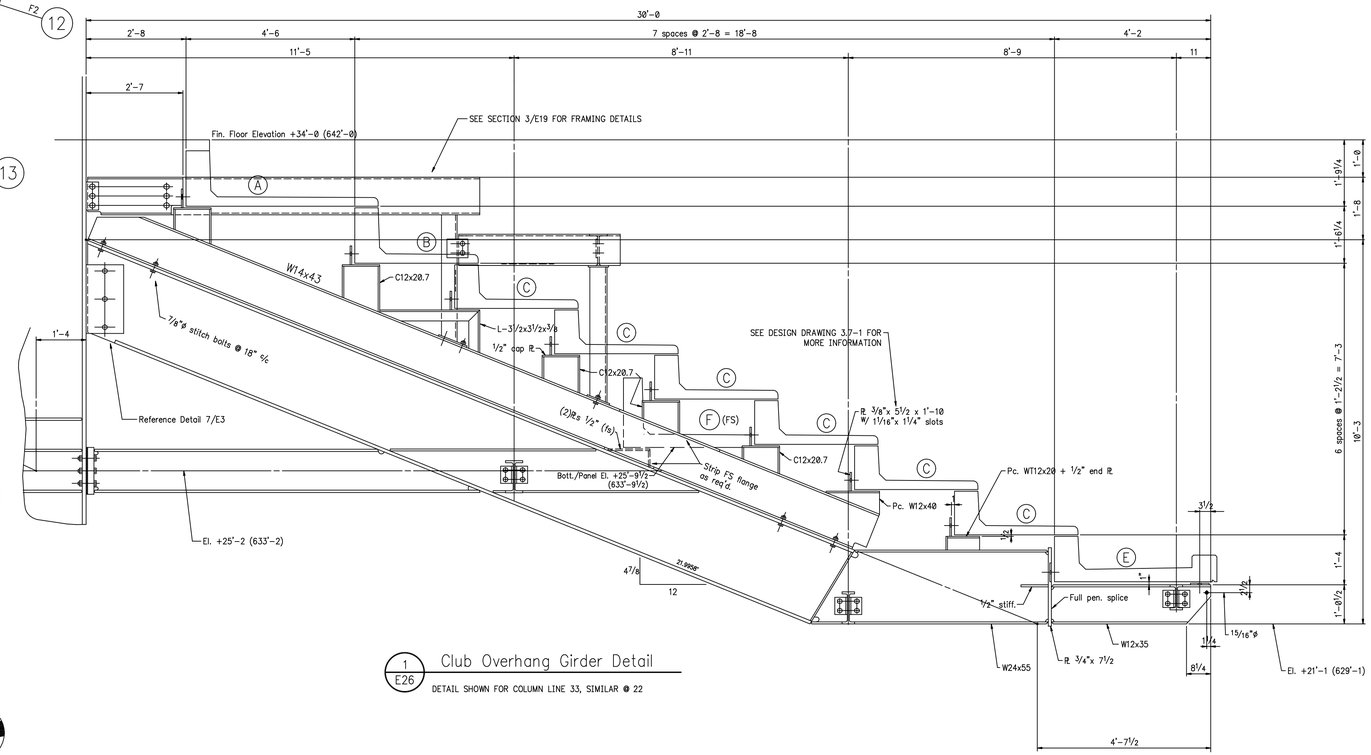

1 / E26 Club Overhang Girder Detail

DETAIL SHOWN FOR COLUMN LINE 33, SIMILAR @ 22

ACTUAL

Partial Club Overhang and Precast Support Framing Plan

T/S ELEVATION AS NOTED ON PLAN

* DENOTES A307 BOLT SLIPJOINT

Buffalo Sports Complex
Buffalo, New York
Hellmuth, Obata & Kassabaum, Inc.
Cowper Const. Management, Inc.
B. Vaughan
DG

E70xx

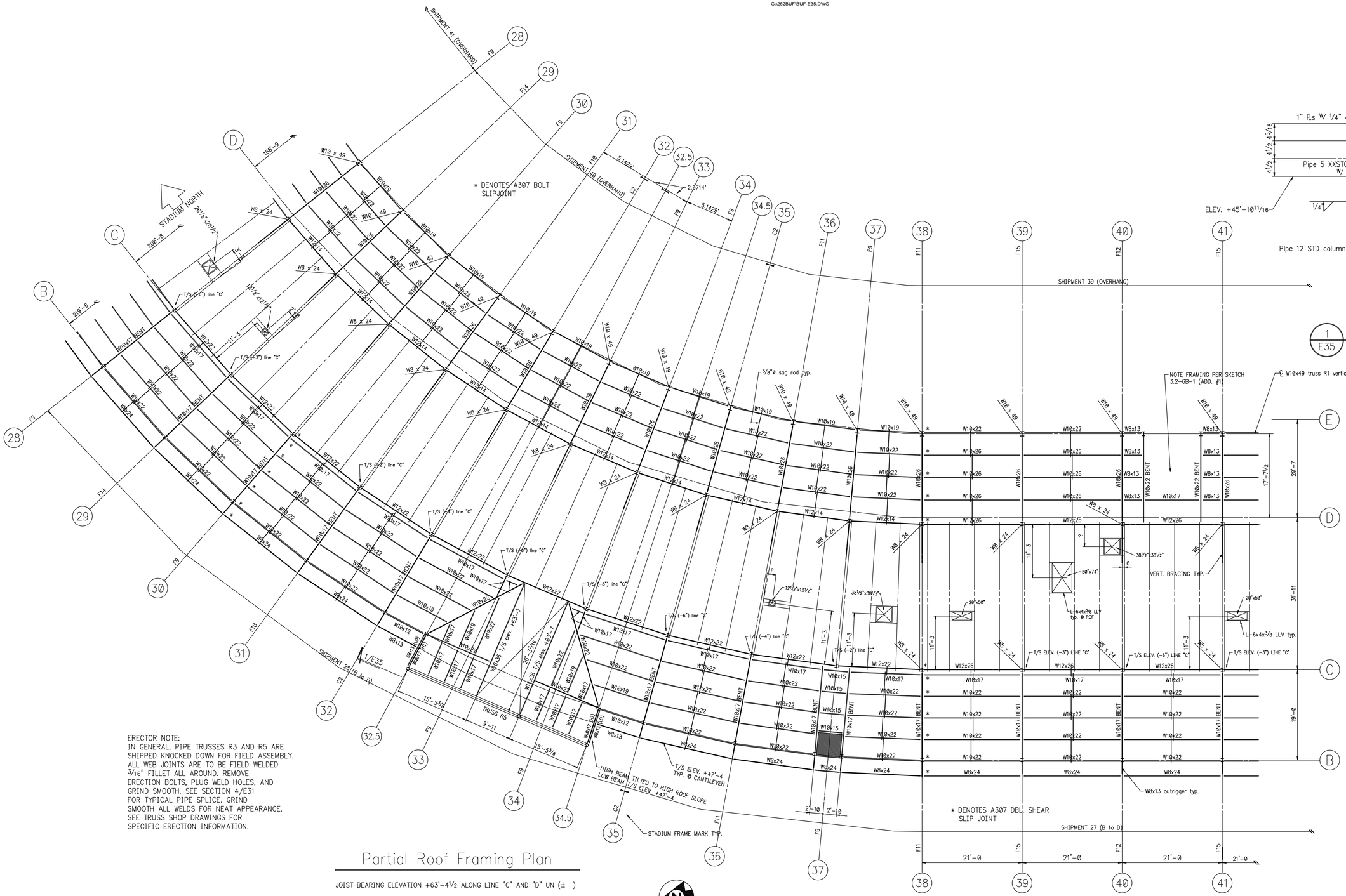

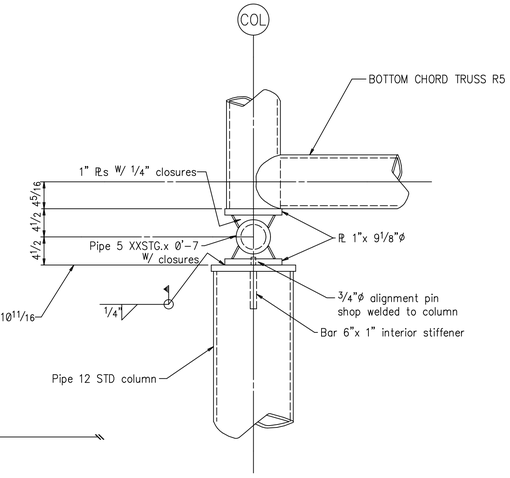

1 / E35 Section

ERECTOR NOTE:
IN GENERAL, PIPE TRUSSES R3 AND R5 ARE SHIPPED KNOCKED DOWN FOR FIELD ASSEMBLY. ALL WEB JOINTS ARE TO BE FIELD WELDED 3/16" FILLET ALL AROUND. REMOVE ERECTION BOLTS, PLUG WELD HOLES, AND GRIND SMOOTH. SEE SECTION 4/E31 FOR TYPICAL PIPE SPLICE. GRIND SMOOTH ALL WELDS FOR NEAT APPEARANCE. SEE TRUSS SHOP DRAWINGS FOR SPECIFIC ERECTION INFORMATION.

Partial Roof Framing Plan

JOIST BEARING ELEVATION +63'-4½ ALONG LINE "C" AND "D" UN (±)

NOTES:
1. ALL ELEVATIONS ARE BASED ON FINISHED MAIN CONCOURSE/ENTRY LEVEL ELEVATION = 0'-0 (ACTUAL ELEVATION = 608'-0).
2. SEE E1 FOR KEY PLAN OF STADIUM AND OVERALL GEOMETRY.
3. SEE E2 FOR TYPICAL CONNECTION NOTES.
4. FRAME SHEETS F1 THRU F4 FOR ELEVATIONS OF STADIUM FRAMES.
5. T/S ELEVATIONS SHOWN IN PARENTHESES (±) ARE RELATIVE TO THE TYPICAL T/S ELEVATION FOR THIS SHEET.

Buffalo Sports Complex
Buffalo, New York
Hellmuth, Obata & Kassabaum, Inc.
Cowper Const. Management, Inc.
B. Vaughan
DG

E70xx

G:\252BUF\BUF-F1.DWG

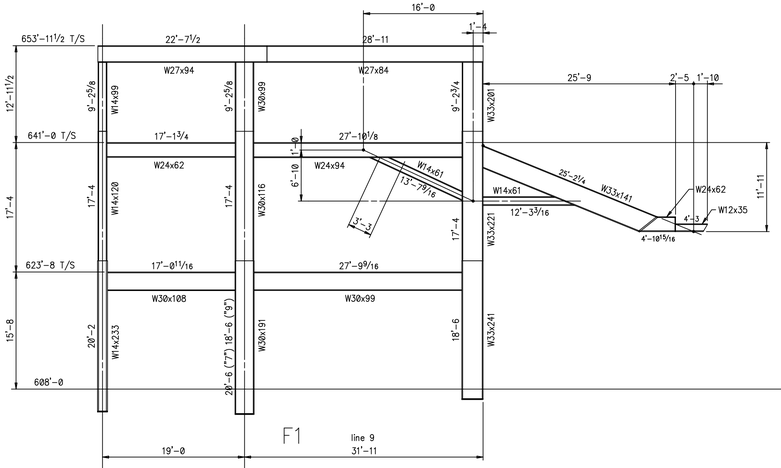

F1 line 9

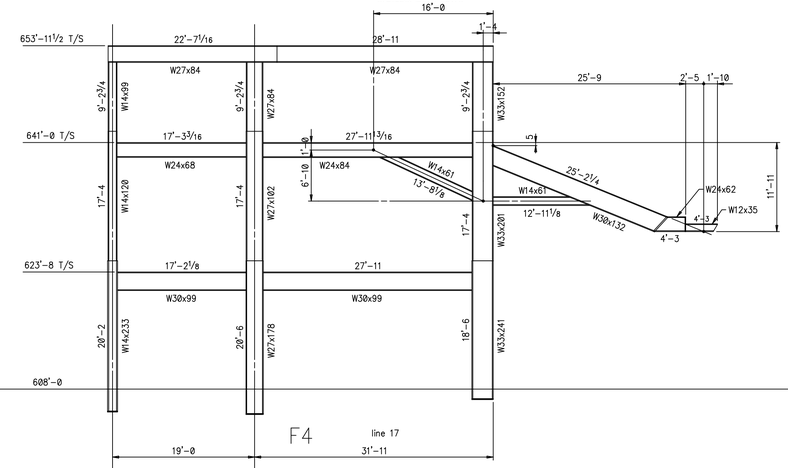

F4 line 17

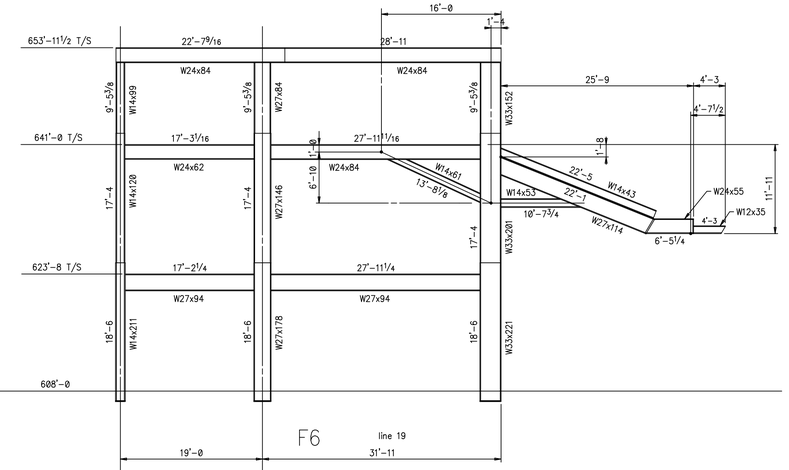

F6 line 19

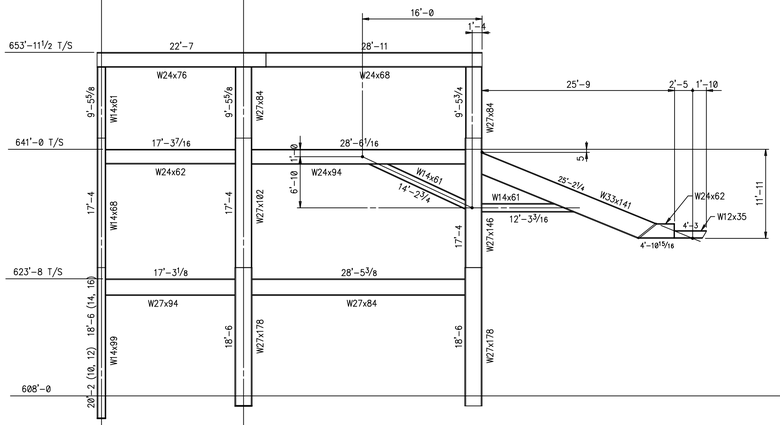

F2 lines 10, 12, 14, 16

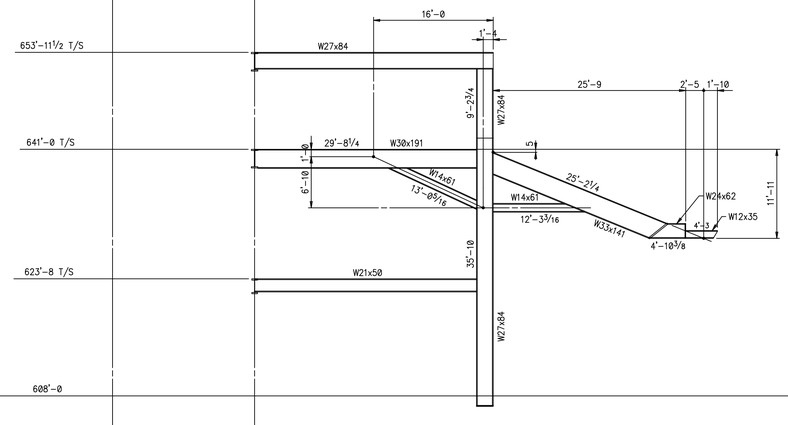

C1 line 8

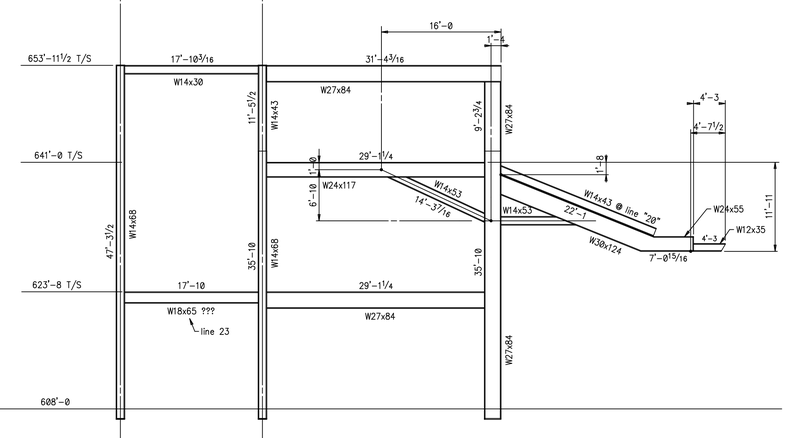

C2 lines 20, 23

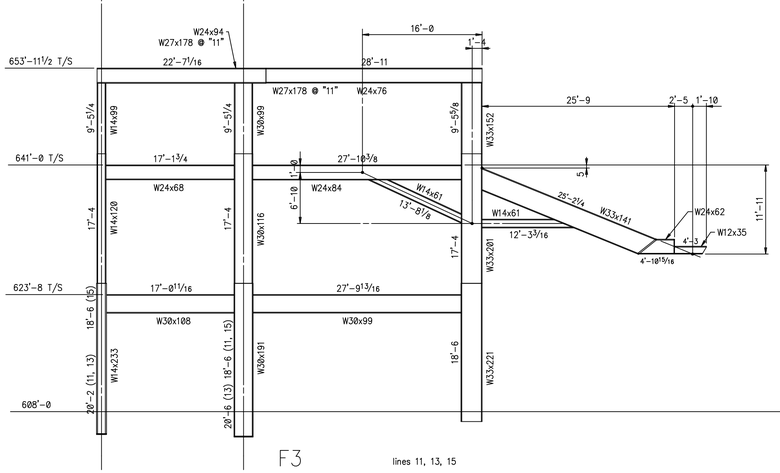

F3 lines 11, 13, 15

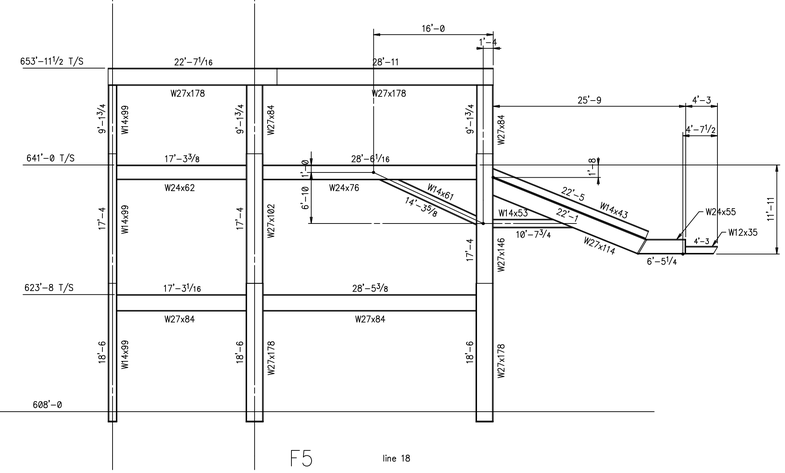

F5 line 18

Buffalo Sports Complex
Buffalo, New York
Hellmuth, Obata & Kassabaum, Inc.
Cowper Const. Management, Inc.
B. Vaughan
DG

E70xx

G:\252BUF\BUF-F2.DWG

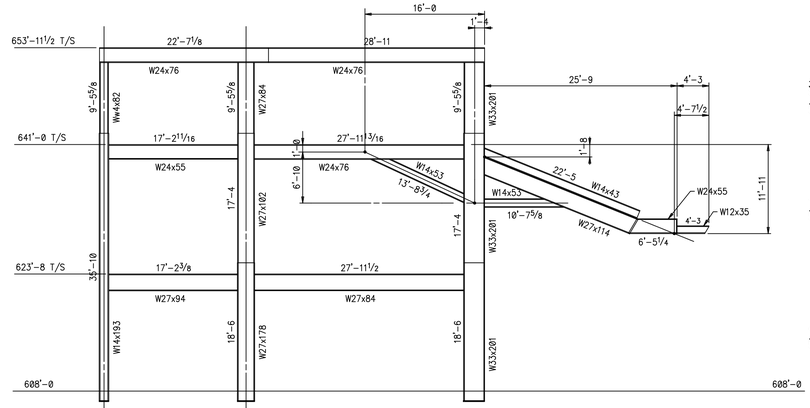

F7 lines 21, 22

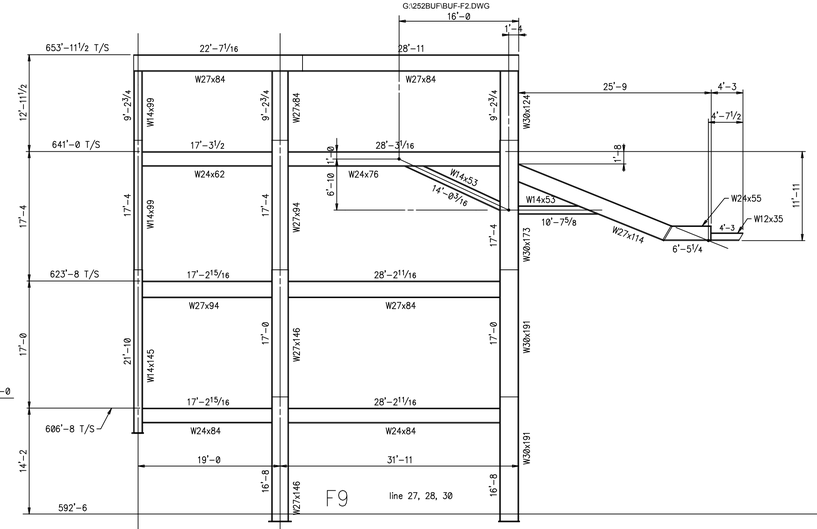

F9 line 27, 28, 30

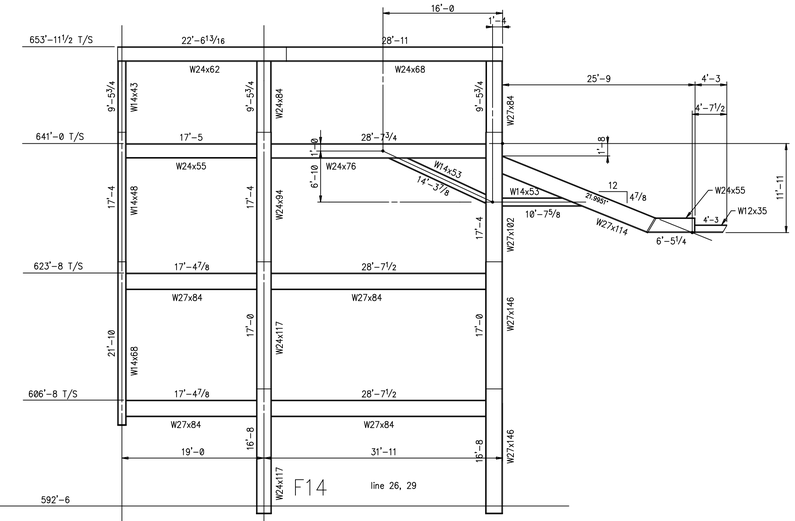

F14 line 26, 29

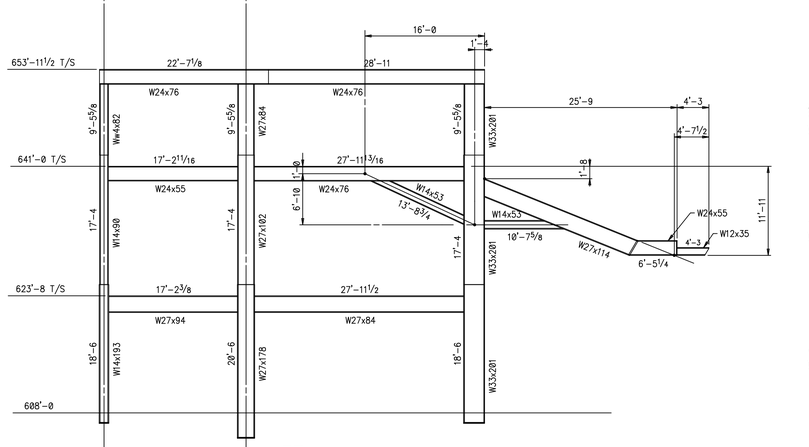

F7 line 24

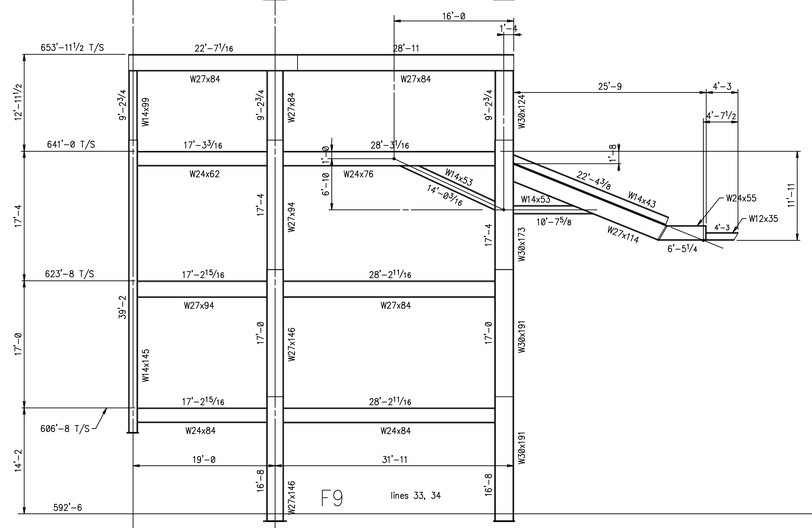

F9 lines 33, 34

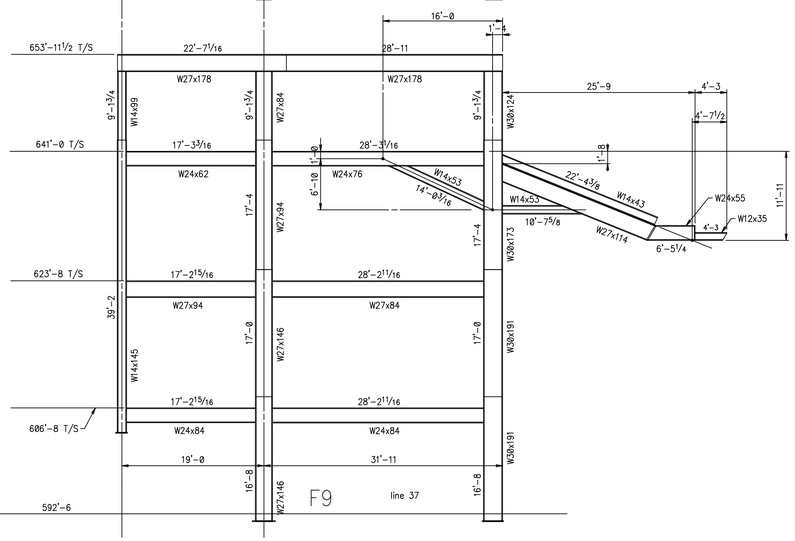

F9 line 37

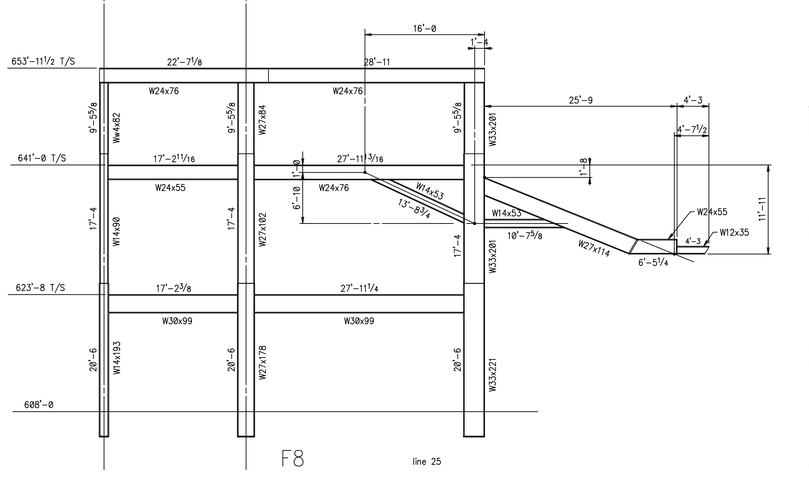

F8 line 25

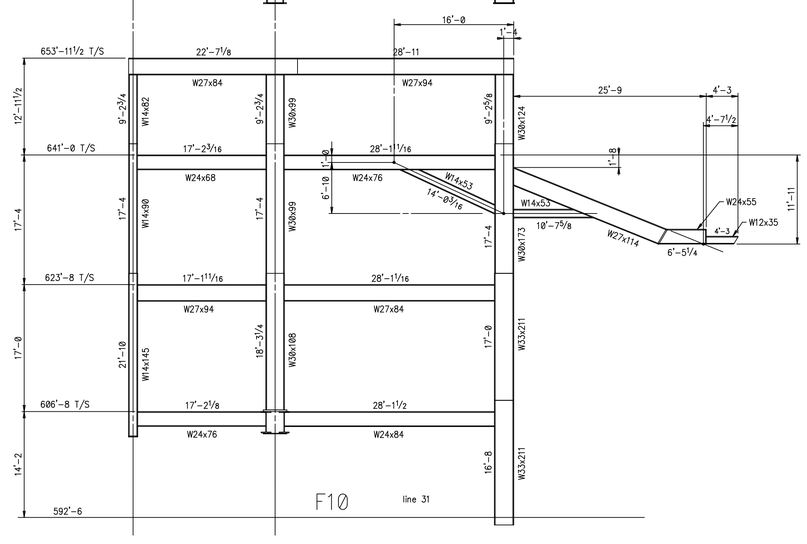

F10 line 31

Buffalo Sports Complex
Buffalo, New York
Hellmuth, Obata & Kassabaum, Inc.
Cowper Const. Management, Inc.
B. Vaughan
DG

E70xx

G:\252BUF\BUF-F3.DWG

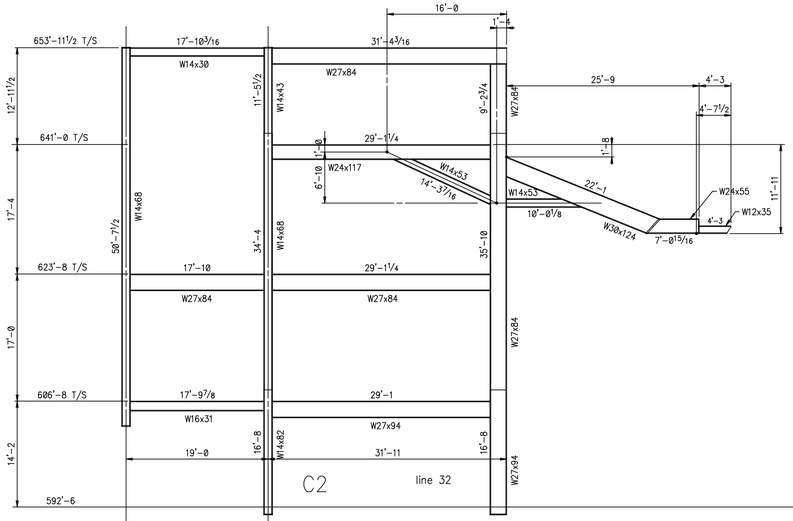

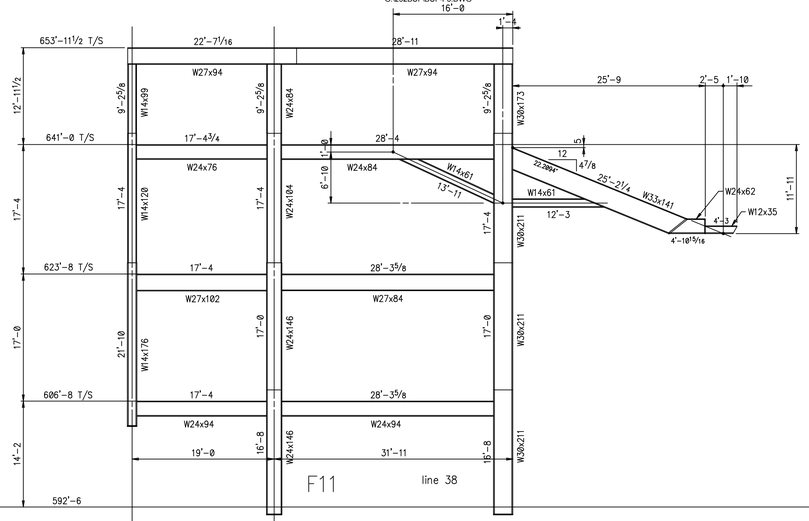

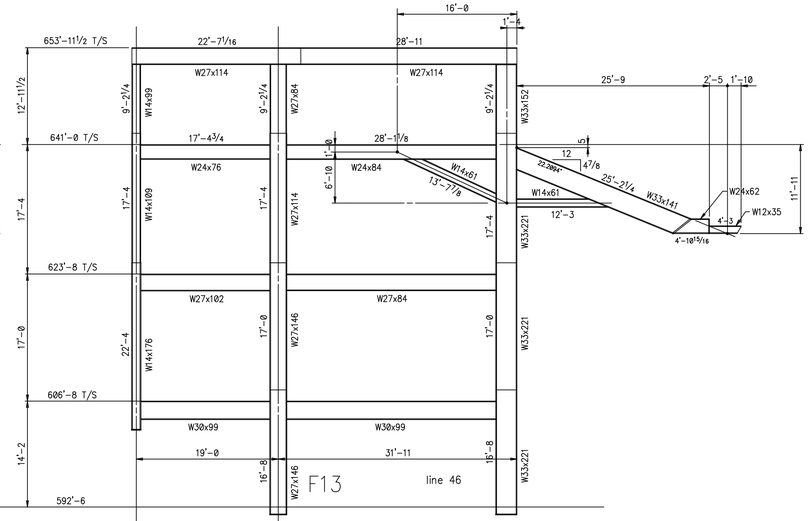

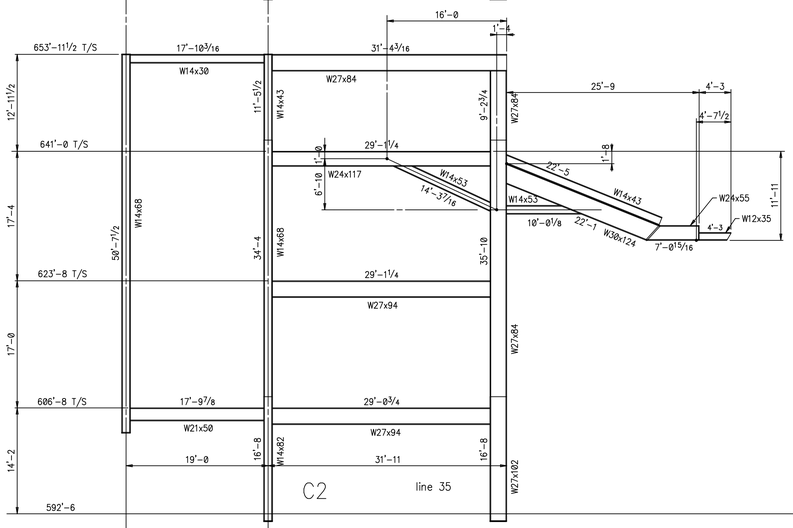

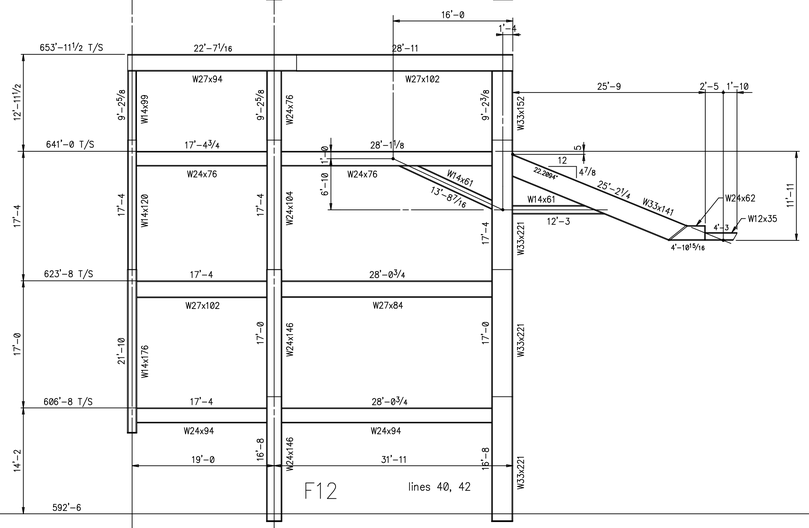

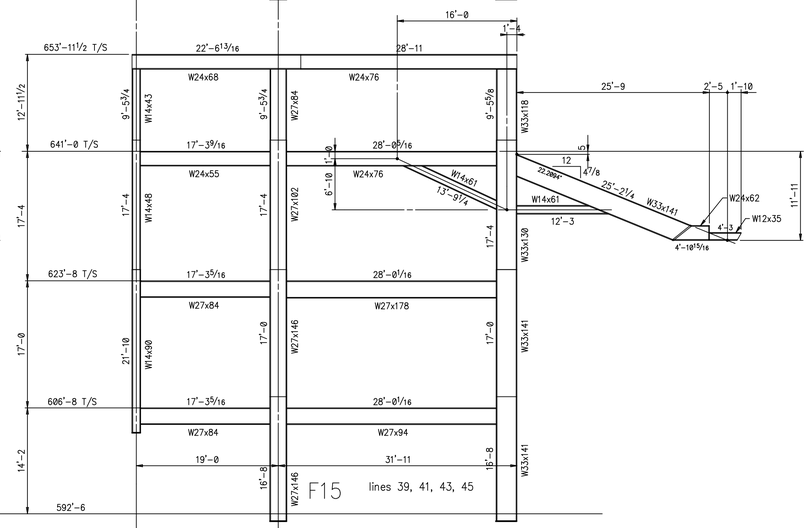

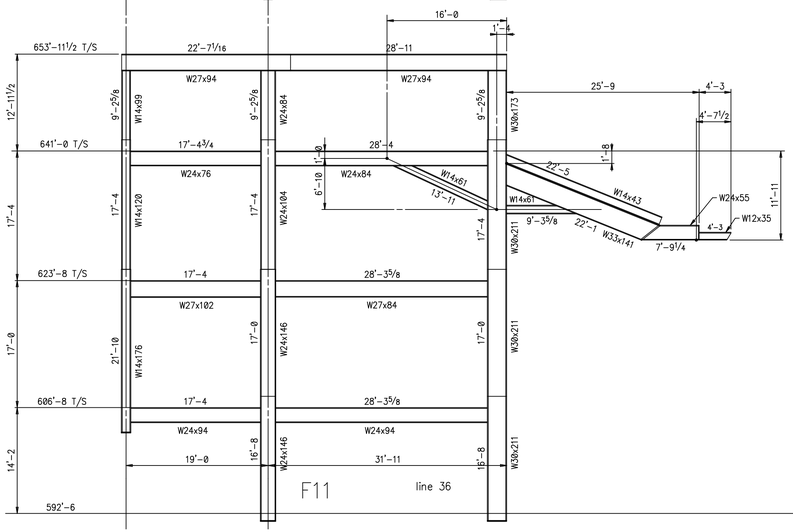

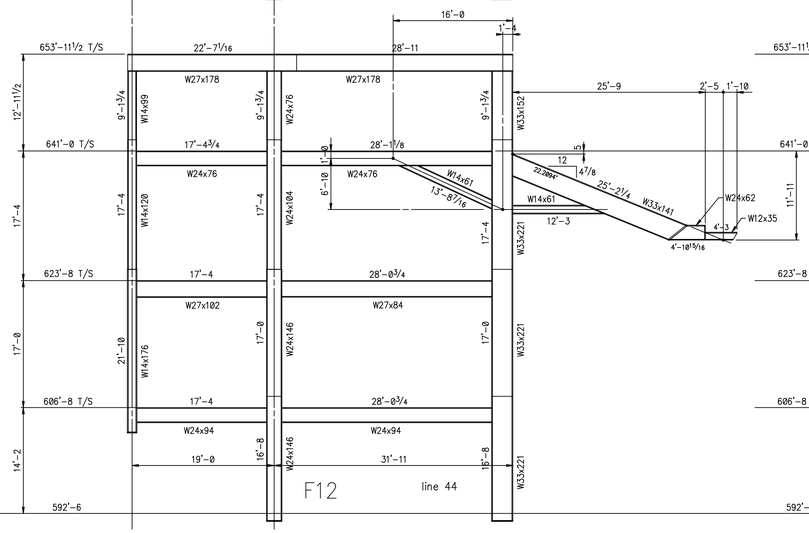

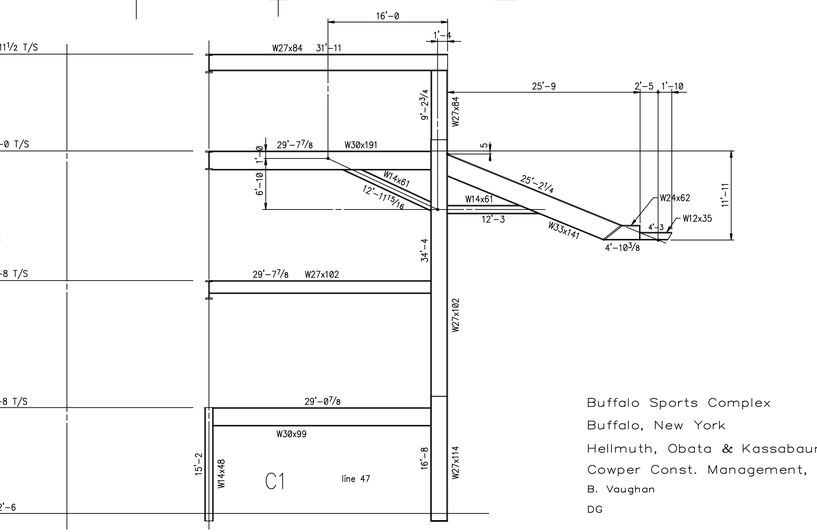

Buffalo Sports Complex
Buffalo, New York
Hellmuth, Obata & Kassabaum, Inc.
Cowper Const. Management, Inc.
B. Vaughan
DG

E70xx